High Performance Liquid Chromatography (HPLC)

- What is HPLC?
- Types of Separations
- Columns and Stationary Phases
- Mobile Phases and Their Role in Separations
- Injection in HPLC
- Detection in HPLC
- Variations on Traditional HPLC
  - Ion Chromatography
  - Size Exclusion Chromatography

The Mobile Phase in HPLC...

- Must do the following:
  - solvate the analyte molecules and the solvent they are in
  - be suitable for the analyte to transfer "back and forth" between during the separation process

Must be:

- compatible with the instrument (pumps, seals, fittings, detector, etc)
- compatible with the stationary phase
- readily available (often use liters/day)
- of adequate purity
  - spectroscopic and trace-composition usually!
- Not too compressible (causes pump/flow problems)
  - Free of gases (which cause compressibility problems)

Common Reverse Phase Solvents

- Methanol CH_3OH
- Acetonitrile $CH_3\,OCN$
- Tetrahydrofuran 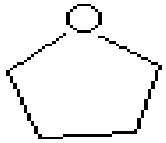
- Water H_2O

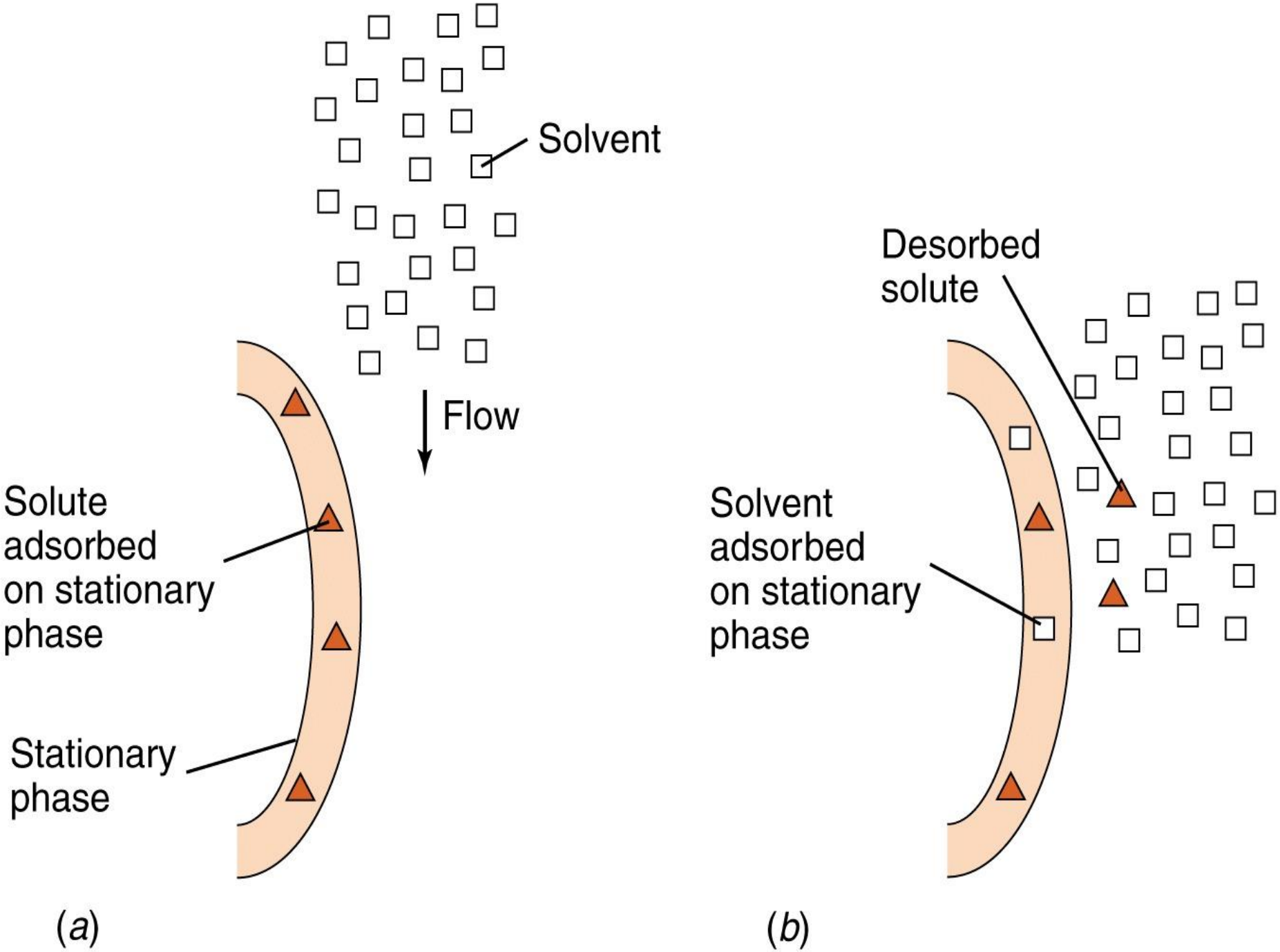
Solvent
Flow
Solute adsorbed on stationary phase
Stationary phase
(a)
Desorbed solute
Solvent adsorbed on stationary phase
(b)

RP-HPLC – Mobile Phase vs k'

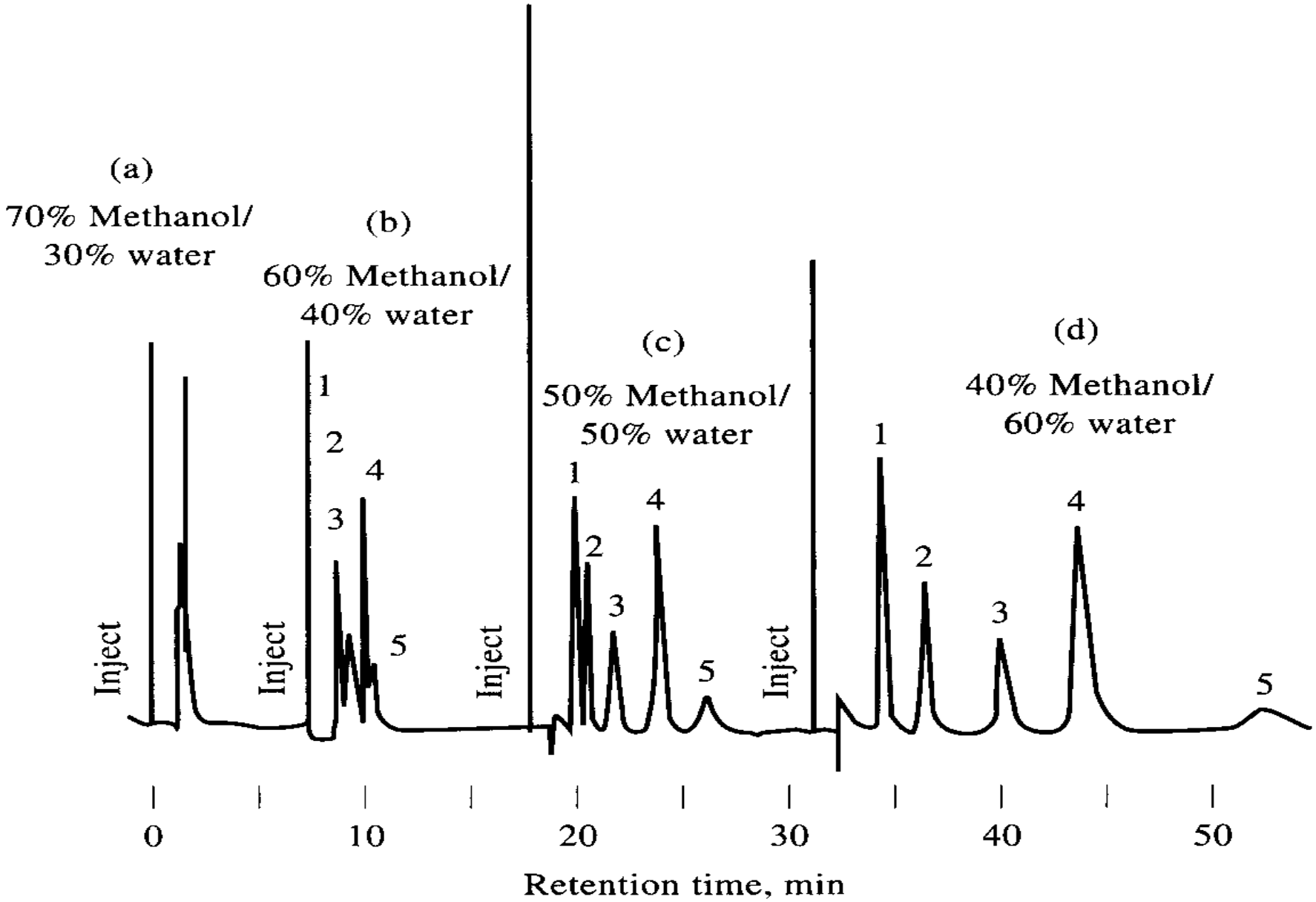

Polarity Index for Mobile Phases……

- The polarity index is a measure of the relative polarity of a solvent. It is used for identifying suitable mobile phase solvents.
  - The more polar your solvent is, the higher the index.
  - You want to try to choose a polarity index for your solvent (or solvent mixture) that optimizes the separation of analytes
    - usually the index is a starting point
    - the polarity of any mixture of solvents to make a mobile phase can be modeled to give a theoretical chromatogram
    - Usually, optimization of solvent composition is experimental
- A similar number is the Eluent Strength (E^o]
- Increasing eluent strength or polarity index values mean increasing solvent polarity.
- Remember, the analyte(s) and samples must be mobile phase and stationary phase compatible!

- Polarity of water > ACN > methanol > THF
- e.g. Water is more polar than methanol
- thus a weaker solvent in RP HPLC
- i.e. Water elutes the solute slower than methanol does. Therefore, when the percentage of water in the mobile phase is higher, the retention times are longer.

Table 25-2 **Eluotropic series and ultraviolet cutoff wavelengths of solvents for adsorption chromatography on silica**

Solvent	Eluent strength (ϵ°)	Ultraviolet cutoff (nm)
Pentane	0.00	190
Hexane	0.01	195
Heptane	0.01	200
Trichlorotrifluoroethane	0.02	231
Toluene	0.22	284
Chloroform	0.26	245
Dichloromethane	0.30	233
Diethyl ether	0.43	215
Ethyl acetate	0.48	256
Methyl *t*-butyl ether	0.48	210
Dioxane	0.51	215
Acetonitrile	0.52	190
Acetone	0.53	330
Tetrahydrofuran	0.53	212
2-Propanol	0.60	205
Methanol	0.70	205

The ultraviolet cutoff for water is 190 nm.

SOURCES: L. R. Snyder, in *High-Performance Liquid Chromatography* (C. Horváth, ed.), Vol. 3 (New York: Academic Press, 1983); *Burdick & Jackson Solvent Guide*, 3rd ed. (Muskegon, MI: Burdick & Jackson Laboratories, 1990).

TABLE 28-2 Properties of Common Chromatographic Mobile Phases

Solvent	Refractive Index[a]	Viscosity, cP[b]	Boiling Point, °C	Polarity Index, P'	Eluent Strength,[c] ε^0
Fluoroalkanes[d]	1.27–1.29	0.4–2.6	50–174	<–2	–0.25
Cyclohexane	1.423	0.90	81	0.04	–0.2
n-Hexane	1.372	0.30	69	0.1	0.01
1-Chlorobutane	1.400	0.42	78	1.0	0.26
Carbon tetrachloride	1.457	0.90	77	1.6	0.18
i-Propyl ether	1.365	0.38	68	2.4	0.28
Toluene	1.494	0.55	110	2.4	0.29
Diethyl ether	1.350	0.24	35	2.8	0.38
Tetrahydrofuran	1.405	0.46	66	4.0	0.57
Chloroform	1.443	0.53	61	4.1	0.40
Ethanol	1.359	1.08	78	4.3	0.88
Ethyl acetate	1.370	0.43	77	4.4	0.58
Dioxane	1.420	1.2	101	4.8	0.56
Methanol	1.326	0.54	65	5.1	0.95
Acetonitrile	1.341	0.34	82	5.8	0.65
Nitromethane	1.380	0.61	101	6.0	0.64
Ethylene glycol	1.431	16.5	182	6.9	1.11
Water	1.333	0.89	100	10.2	Large

[a] At 25°C.

[b] The centipoise is a common unit of viscosity; in SI units, 1 cP = 1 mN · s · m^{-2}.

[c] On Al_2O_3. Multiplication by 0.8 gives ε^0 on SiO_2.

[d] Properties depend on molecular mass range of data given.

Columns

- Heavy wall, glass lined metal tubing or SS tubing, withstand ↑ pressure upto 680 atm & chemical action of MP.
- Interior of tubing smooth with uniform bore dia
- Straight column preferred
- Column end- zero void volume, Length- 10-30 cm.
- Short, fast- 3-8 cm.

TYPICAL COLUMN

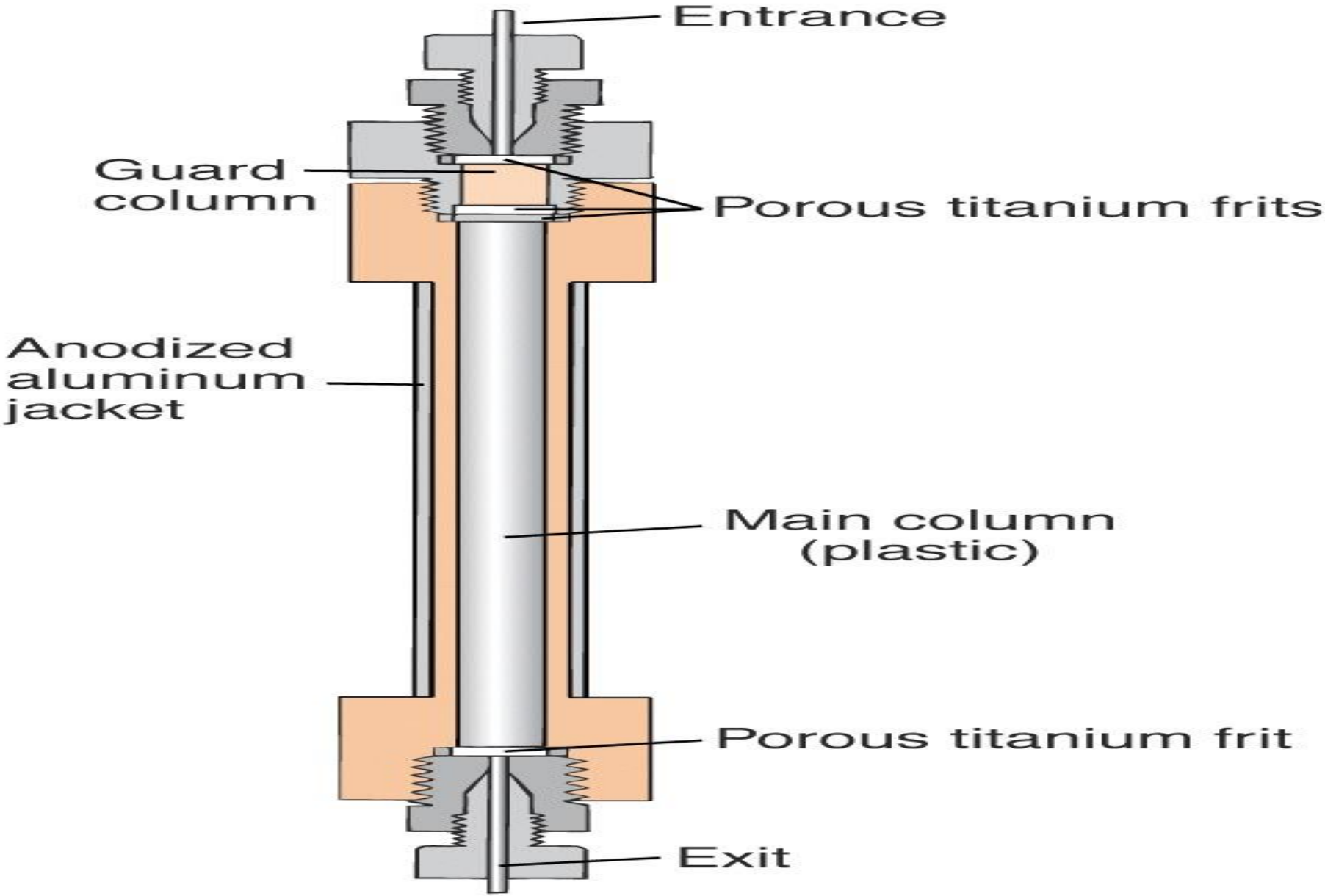

HPLC Column

Column dimension (size), particle size and pore size, stationary phase

Water/Methanol

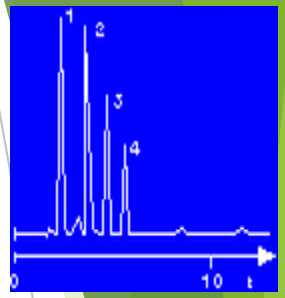

C_{18}	4.6 x 250 mm	5μm	$300^{o}A$

Stationary Phase

Dimension

Particle Size

Pore Size

HPLC Columns

	Particle size	Column ID	Sample Load
Analytical	3 - 5 μ	0.3 – 4.6 mm	ng - μg
Semi-prep	10 μ	8 - 10 mm	1 - 100 mg
Preparative	10 - 30 μ	5 - 200 mm	gram scale

- An HPLC column consists of a stainless steel tube which is sealed with fittings on both ends. Steel frits in the end fittings keep the packing material in the column.
- Analytical columns have inner diameters of 1 - 10 mm and lengths of 25 - 250 mm. They are operated at flow rates of 60 µl - 5.0 ml/min.
- In preparative chromatography columns with an inside diameter of 200 mm and a length of 600 mm are used. They are operated at a flow rate of 1750 ml/min.
- To protect the actual separation column from chemical contamination, a guard column with the same packing material as the separation column is installed.

Guard columns or Inline Filters

- To ↑ the life of analytical columns
- Inserted ahead of AC
- Act as physical & chemical filters
- Short- 5 cm,
- Contains stationary phase similar to AC
- Protect AC from contaminants from MP/ from degrading sample inj valves which Results in broadening of solute peaks & degradation of separation of components.

Optimization of column performance

- Correct choice of column
- Correct choice of mobile phase
- Decision on the type of mobile phase composition
  - constant composition = isocratic
  - varying composition = gradient elution
- Determination of flow rate should be constant
  - usually it is
- Decision on heating the column
  - heating HPLC columns

Gradient Elution

- In Isocratic elution Sample is injected to column & mobile phase is unchanged thru out the time required for sample components to elute.
- Single isocratic elution can't separate a complex mix. In reasonable time, with good detectability. Therefore, solvent programming called gradient elution is req.
- That is changing the mobile phase composition stepwise or continuously during elution.
- Gradient elution- trial & error
- Gives max., resolution, sensitivity.

RP-HPLC – Gradient Elution

Phenols

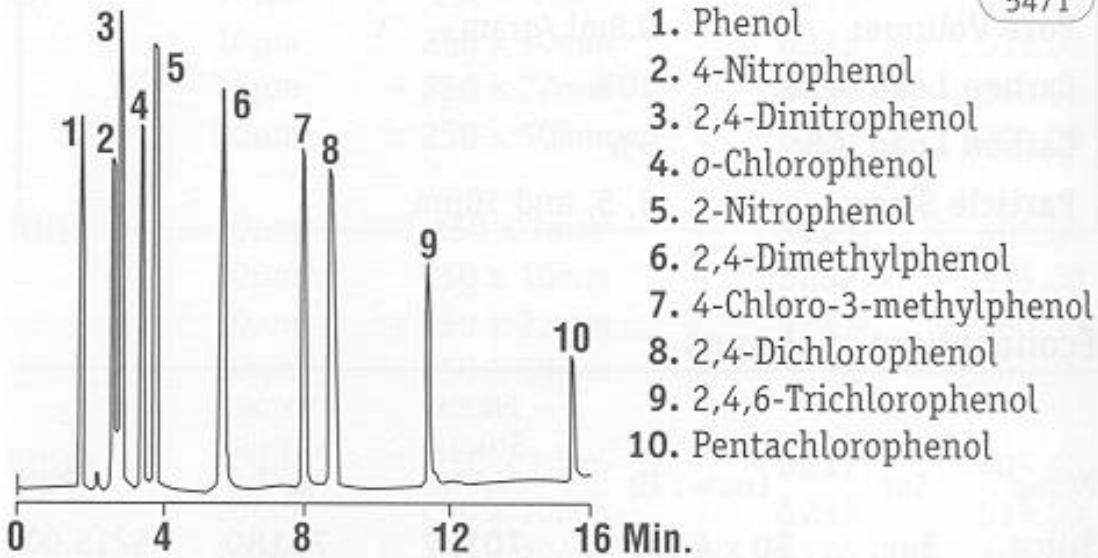

1. Phenol
2. 4-Nitrophenol
3. 2,4-Dinitrophenol
4. *o*-Chlorophenol
5. 2-Nitrophenol
6. 2,4-Dimethylphenol
7. 4-Chloro-3-methylphenol
8. 2,4-Dichlorophenol
9. 2,4,6-Trichlorophenol
10. Pentachlorophenol

Column: Econosphere™ C8, 5µm, 150 x 4.6mm

Mobile Phase: **A:** Water + 1% Acetic Acid
B: Methanol + 1% Acetic Acid

Gradient:

Time:	0	15
%B:	40	100

Flowrate: 1.5mL/min

Detector: UV at 280nm

Derivatization

- To enhance detectibility by U.V. absorption, fluorescence, electrochemistry.
- Precolumn derivatization before seperation
- Derivatized sample is injected
- After separation post column reaction is done.
- Eg. If detection sensitivity to 254nm λ in U.V. absorption is Zero or $\downarrow$. Detection can be $\uparrow$ by attaching to solute a chromophore with $\uparrow$ absorption at 254nm

Reagents	Reactants
N-succinimidyl 4-Nitrophenyl acetate	Amines/ Amino acids
3,5- Dinitrobenzoyl cl	Alcohols, Amines, Phenols

- Formation of fluorescent derivative
- Allows sensitive detection of non-fluor. Mol.
- Exploits selectivity of fluorescence by allowing detection of all compounds with particular fn grps in a sample after derivatization.
- Eg. 4-Bromomethyl-7-methoxycoumarin
  -COOH

Post column Reaction

- Effluent from HPLC column is mixed with a reagent before it enters the detector.
- A column filled with glass beads mixes effluent with reagent (added thru T valve) before passes the detector.
- Post column addition of an alkaline buffer (pH – 10.4) ↑ 20 fold sensitivity of HPLC analysis for barbiturates. 2ng of drg can be detected bcos at alkaline pH the UV absorption max for barbiturates shifts to longer λ 240 nm.
- If simple mobile phase is adjusted to alkaline pH- it dissolves the silica based column packing.